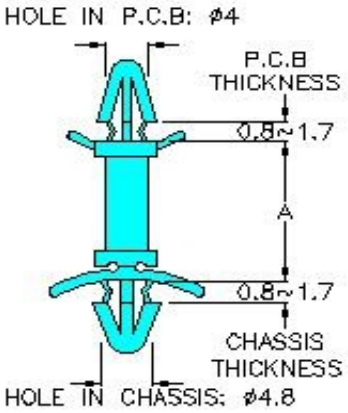
HOLE IN P.C.B: ϕ4
P.C.B
THICKNESS
0.8~1.7
A
0.8~1.7
CHASSIS
THICKNESS
HOLE IN CHASSIS: ϕ4.8